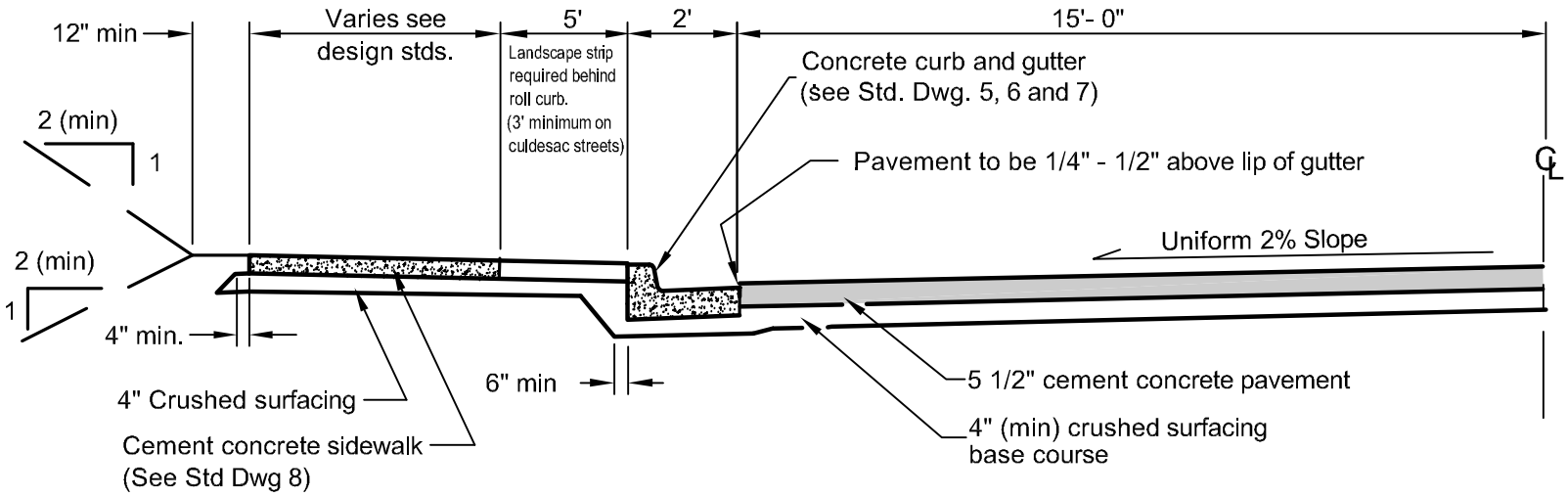

TYPICAL HALF-SECTION

NOTES:

1. Section as drawn is symmetrical about the centerline.
2. All dimensions are minimums.
3. Cement concrete pavement shall comply with the 2006 edition of the Standard Specifications. Compliance is required with the city of Pullman Standard Construction Specifications, Section C-6.
4. In solid rock, the cut slope may be steepened from 2 : 1 to 1/2 : 1 .
5. In cuts greater than 6 feet in height, acceptable side slopes will be determined by the Engineer based on engineering analysis.
6. Curb and gutter may be cast integrally with the pavement.
7. Compact the top 6 inches of subgrade to 95% (min) of maximum theoretical density per ASTM D1557 (Modified Proctor Method).

CONCRETE SECTION FOR RESIDENTIAL STREETS

CITY OF PULLMAN
ENGINEERING DIVISION

PAGE NO: 3

ADOPTED: April 8, 2008

AutoCAD: Concrete Street Typical Section

dwc 3-00
DBR