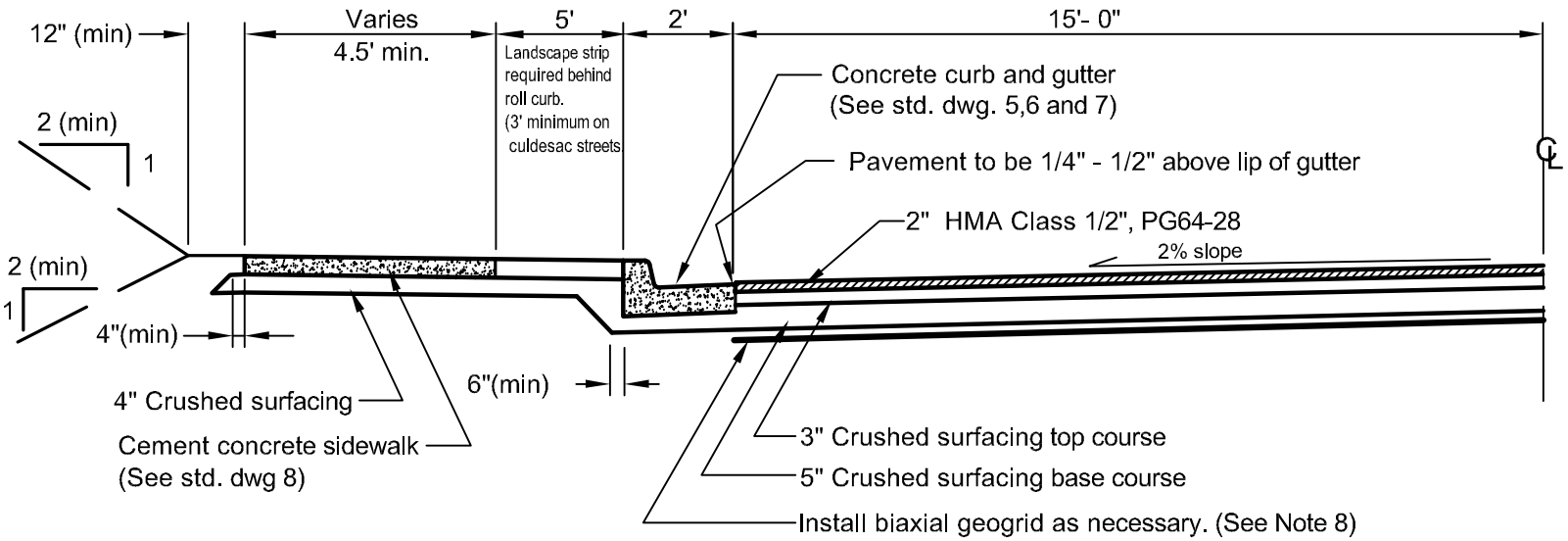

TYPICAL HALF-SECTION

NOTES:

1. Half-Section is symmetrical about the centerline.
2. All dimensions are minimums.
3. This design is for typical clayey-silt soils found in the Pullman area. Where other soil types are encountered, the Engineer may establish greater or lesser minimum thicknesses.
4. In solid rock, cut slope may be steepened from 2 : 1 to 1/2 : 1
5. In cuts greater than 6 feet in height, acceptable side slopes will be determined by the Engineer based on engineering analysis.
6. Compact the top 6 inches of subgrade to 95% of maximum theoretical density : ASTM D1557 (Modified Proctor method).
7. Standard 33-foot-wide streets, or narrower, shall be paved in 2 passes, maximum.
8. Biaxial geogrid shall consist of Tensar brand BX-1200 (or equal) UV-protected geogrid. Geogrid shall be placed only where necessary to meet minimum structural specifications and/or constructability requirements, as directed by the Engineer or his designated field inspector.

ASPHALT SECTION FOR RESIDENTIAL STREETS

CITY OF PULLMAN
ENGINEERING DIVISION

ADOPTED: April 8, 2008

PAGE NO: 2

AutoCAD: Asphalt Street Typical Section

06.dwg
DRR